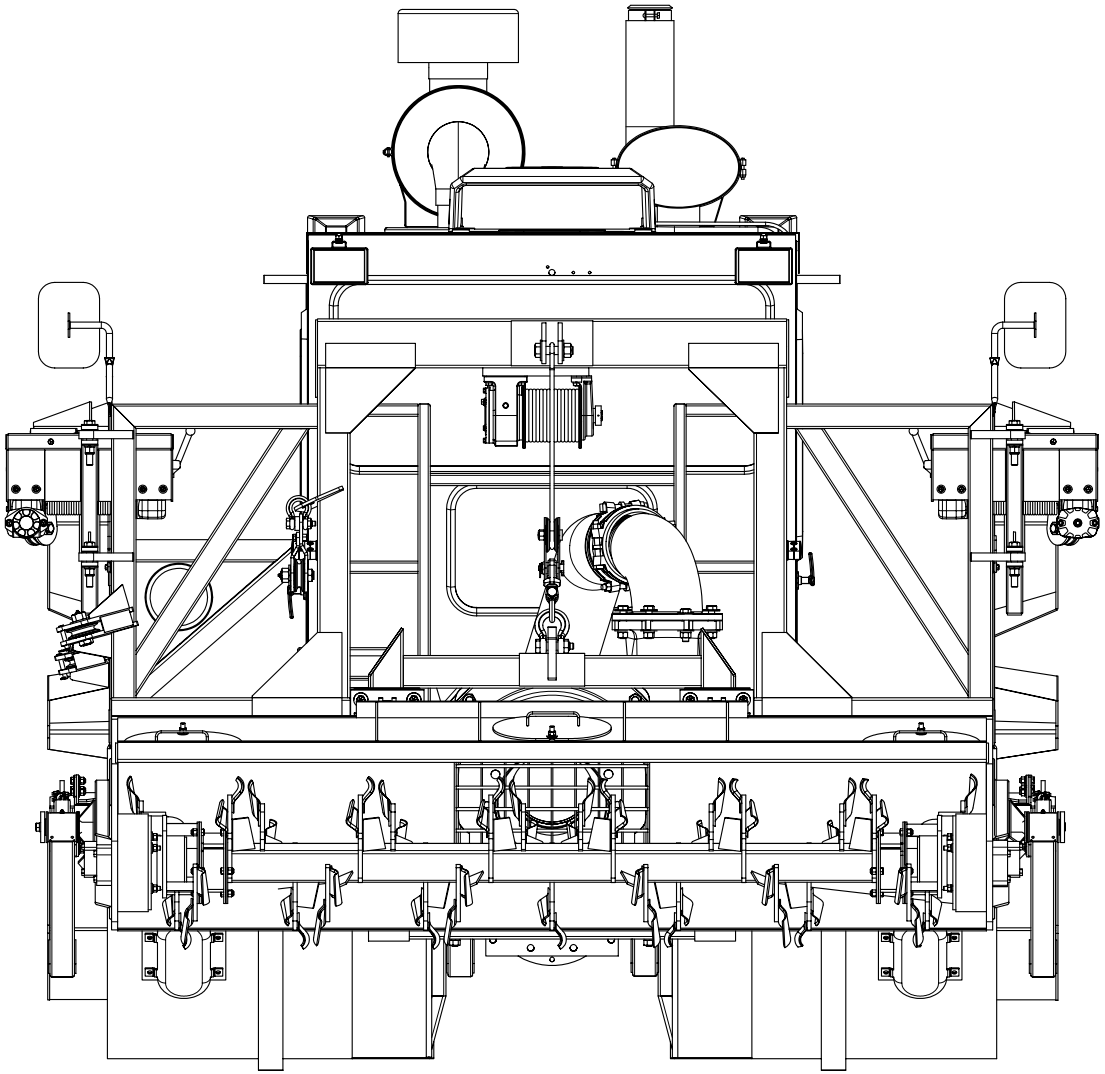

DREDGE ASSEMBLY, 5012 HP
DREDGE ASSEMBLY, 5012 HP

INNOVATIVE MATERIAL SYSTEMS
A DIVISION OF LIQUID WASTE TECHNOLOGY, LLC.
Somerset, WI 715-247-5464 ■ FAX 715-247-3934

DRAWN	CRC	2/08 2005	SHEET 2 OF 3
DWG NO			SCALE N
APPD			PART OR DWG NO 5301075B